Field Control Layer Device

BACnet Web Embedded Building Controller

WC8846P

【Description】

WC8846P is a BACnet B-BC class stand alone programmable controller with embedded Web server and router function. It supports scheduling, calendars, data logging and event enrollment BACnet objects. It can be used to monitor and control any mechanical device. It uses a 32 bit microchip, there are onboard I/O points, a MS/TP port for Lan connection for up to 32 controllers, and an EIM port that can connect up to 24 EIM I/O expansion modules in various combinations of I/O points. The MSnet port is used to connect to a control panel such as a Touch screen ect (HMI). The WC8846P can communicate to other WC8846P over the internet and be reprogrammed remotely.

【Features】

- A web server. The user can access its web page by using any web browser.
- An Ethernet port, selectable BACnet Ethernet (ISO-8802-2) or the BACnet/IP communication. Support peer to peer external device read or write.
- A MS/TP RS-485 port, maximum communication speed 76.8 Kbps, with 2500Vrms electrical isolated protection and TVS ARRAY surge protection.
- A MSnet port for interface with HMI devices such as a MST, DSP, DST control panel or any MODBUS RTU master or slave device.
- An EIMnet communication interface can connect up to 24 EIM I/O expansion modules.
- A RS-232 port to connect AD-linker setup cable to a PC for hardware setup by using the Hyper Terminal.
- With DDC controller functionality, can carry out calculations such as proportional, integral, differential, floating, logic, arithmetic etc.
- Stand Alone functionality with a Build-in clock, Calendars, Schedules, Notification Class, Event Enrollments, Trend-logs standard BACnet objects. Schedules and event enrollments support external device access function.
- 1,000 Binary Value (BV) and 1,000 Analog Value (AV) points, the analog value adopts high precision floating-point calculation. BV points support 16 priority arrays.

【Specification】

Model	BI	AI	BO	AO	EIM #	DDC #	Calendar	Schedule	Notification	Event	Trend-log
WC8846P	8	8	4	6	24	32	20	200	20	200	200

Power Supply : 24VAC/VDC, 15VA without load. 95VA full loaded.

Microprocessor : Dual 32-bit MCU.

Memory : 512K FRAM, 64MB SRAM, 128MB Flash memory.

Binary Input (BI) : 12VDC detection voltage, 1,000Vdc optical coupling isolates, dry contact or open collector signal.

Analog Input (AI) : 16-bit resolution, jumper selectable to accept 3KΩ, 10KΩ NTC thermistor, 0~10VDC, or 4~20mA Pulse input signals.

Binary Output (BO) : Hot-switched Triacs outputs with 24 VAC/DC, 0.5A. Manual on / off / auto override switch.

Analog Output (AO) : 16-bit resolution, 0~10VDC output, manual/auto switch, Manually adjustable 0-10vdc via onboard pot.

Ethernet Port : 100M Ethernet.

MS/TP Port : 2-wire MS/TP RS-485 bus, speed 9,600/ 19,200/ 38,400/ 76,800 bps, auto select, distance1, 200 M, 2500Vrms optical coupling isolator and TVS ARRAY surge protection.

MSnet Port : A MODBUS RTU RS-485 port, communication speed 9,600/19,200/38,400bps bps selectable, connect to a control panel.

EIM Port : RS-485 bus, communication speed 38,400 bps, connects to 24 I/O expansion module EIM..M.

Clock : Built-in clock, gold capacitor memory during power failure .

Environment : 0~50℃,20~90%RH, non-condensing

Certification : BTL BACnet B-BC, CE, FCC, Park 15, Subpart B, Class A, UL916 Listed.

【Network Architecture】

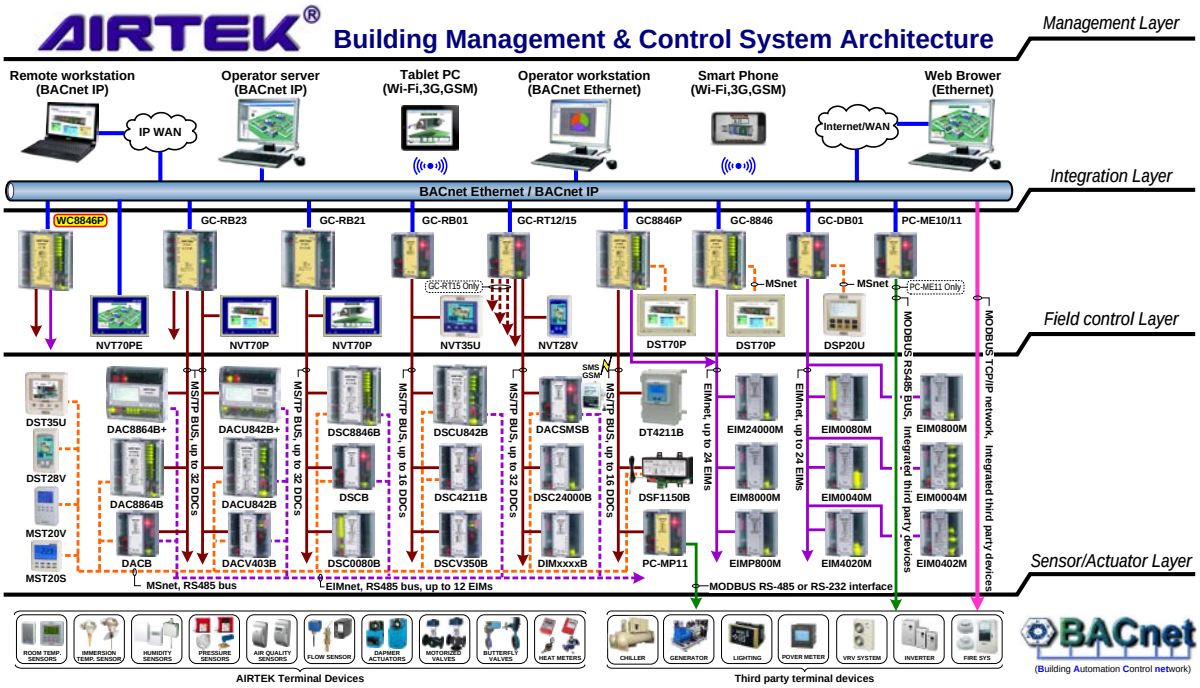

【Wiring Diagram】

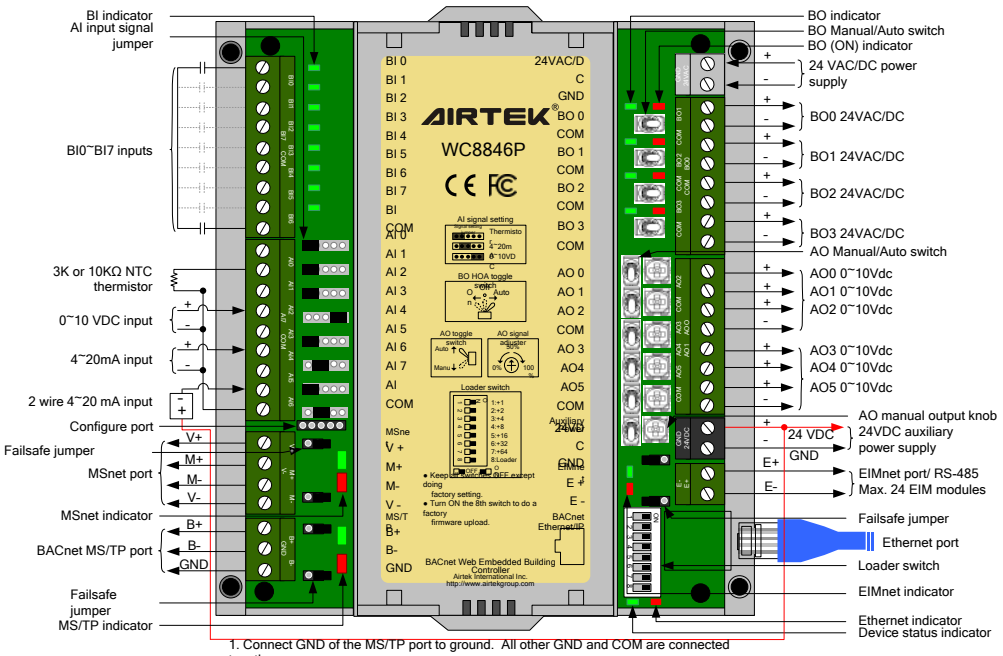

1. Connect GND of the MS/TP port to ground. All other GND and COM are connected together.
2. Make sure jumper selection of AI and AO signal are correct.
3. When EIM module works with WC, enough power supply is a must.

【Dimension】 Unit：mm

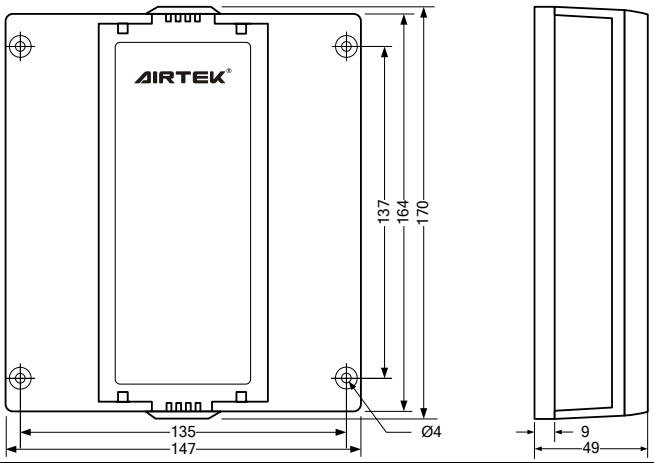

Please refer to http://www.airtek.com.au for the most resent update information.